VES-661(T) A+B

ISO 9001 CERTIFIED

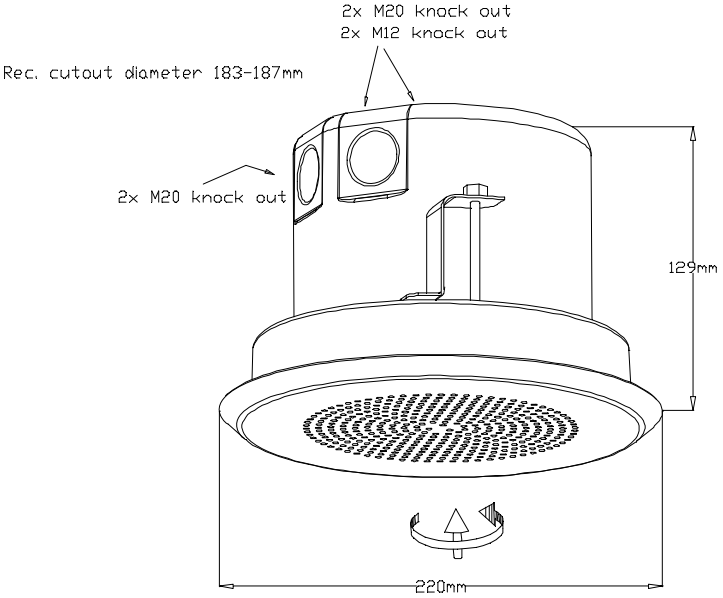

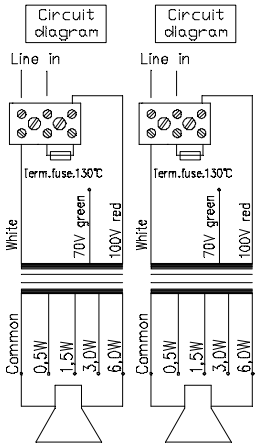

70/100 volt combined transformer Primary connections	
White : Green	70 V
White : Red	100 V
Secondary nominal tappings	
C : 6,0W	6,0 W
C : 3,0W	3,0 W
C : 1,5W	1,5 W
C : 0,5W	0,5 W

BS5839 Part 8 VA compliant

Sound pressure levels at 1W/1m A+B system

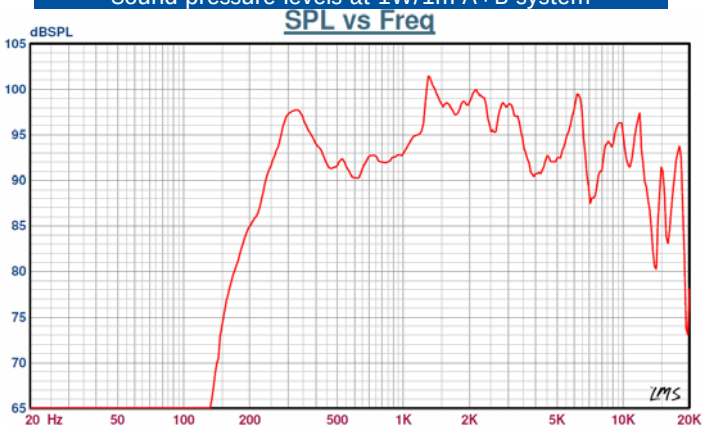

Specifications	
Material / Color	Steel / White RAL 9010
Mounting	3 screws
Termination	Ceramic terminals
Weight	2,0 kg
IP-rating	N/A
Max. / min. amb. temp	110°C / -20°C
Standard version	100 V transformer
Rated / max. power	6 W / 2x6 W
SPL 1W/1m	93 dB
SPL rated power	99 dB
Effective freq. range	240 – 13000 Hz
Dispersion (-6dB) 1kHz / 4kHz	N/A
Options	Impedances, colors, labels

Installation, Operation and Maintenance Procedures

- Two separate loudspeakers, two transformers and two terminals (A + B system)
- Install the steel box into the cut-out hole turning the screws connected to the three hooks, screw clockwise until the ring is fixed to the ceiling.
- Lead cable through box and connect to terminal.
- If 70V, replace red cable with the green cable in the terminal.
- Turn the grill gently clockwise within the ring until it stops.
- For optimum performance, always use the correct voltage / power and operate within the frequency limits as stated.
- Transformer compliant to British standard 5839.
- Do not open loudspeaker when energized.
- This loudspeaker is supplied with a 2 year warranty against defective workmanship.

CE

DNH reserves the right to alter specifications without notice

Thank you for reading this data sheet.

For pricing or for further information, please contact us at our UK Office, using the details below.

UK Office
Keison Products,
P.O. Box 2124, Chelmsford, Essex, CM1 3UP, England.
Tel: +44 (0)330 088 0560
Fax: +44 (0)1245 808399
Email: sales@keison.co.uk

Please note - Product designs and specifications are subject to change without notice. The user is responsible for determining the suitability of this product.