USER'S GUIDE

Installation & Operation Instructions

Area-Velocity Flow Meter

Model UF AV5000

Manual Series B.1.4

Note: This page has been left blank intentionally.

INDEX

CONNECTIONS 4
FUNCTION TEST 4
KEYPAD SYSTEM 6
CALIBRATION MENU 8
MESSAGE 9
STATUS 9
PASSWORD 10
UNITS/MODE 11
CALIBRATION 12
RELAY PARAMETERS 16
SPECIAL FUNCTIONS 17
INSTALLATION - SENSOR LOCATION 19
ENCLOSURE INSTALLATION 23
FIELD TROUBLESHOOTING 24
APPLICATIONS HOTLINE 26
PRODUCT RETURN PROCEDURE 27
AREA-VELOCITY FLOW DATA SHEET 28
APPENDIX A – OPTIONS 31
DATA LOGGING (OPTIONAL) 36
SPECIFICATIONS 39

IMPORTANT NOTE: This instrument is manufactured and calibrated to meet product specifications. Please read this manual carefully before installation and operation. Any unauthorized repairs or modifications may result in a suspension of the warranty.

Available in Adobe Acrobat pdf format

CONNECTIONS:

POWER INPUT: 100 to 240 VAC 50/60Hz. No adjustments are necessary for voltages within this range. Connect L (Live) N (Neutral) and AC Ground.

Optional DC: 9-32 VDC. Connect to + and -terminals.

Optional Thermostat and Heater modules are available rated for 115 VAC or 230 VAC.

IMPORTANT NOTE: AC power input and relay connection wires must have conduit entry to the instrument enclosure. Installation requires a switch, overcurrent fuse or circuitbreaker in the building (in close proximity to the equipment) that is marked as the disconnect switch.

⚠ Risk of electric shock. Loosen cover screw to access connections. Only qualified personnel should access connections.

Note: Use of instrumentation over 40°C ambient requires special field wiring.

Note: User replaceable fuse is 2 Amp 250V (T2AL250V).

FUNCTION TEST:

Connect the sensor to the **TDCR** terminals as shown below, then apply power. Allow 30 seconds for the UF AV5000 to initialize.

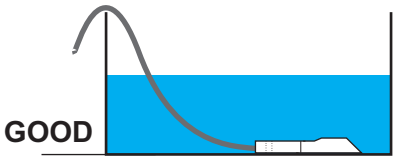

A. Place QZ02L sensor (flat to the bottom) in a bucket of water about 6” deep and select Level mode (from UNITS/MODE menu) to see a level reading.

B. Select Velocity mode and stir the water to see a velocity reading.

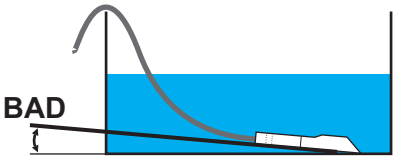

CONNECTIONS

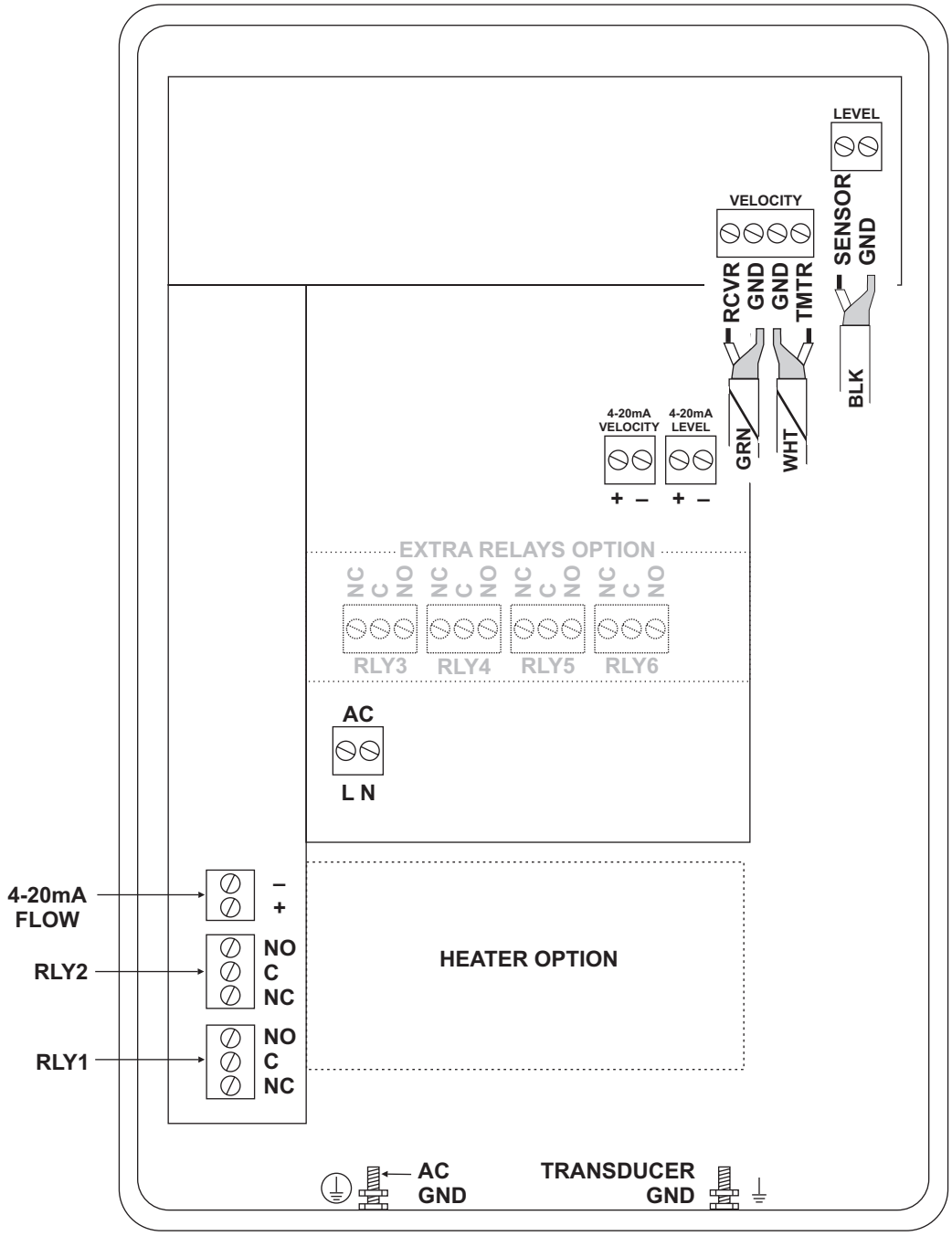

KEYPAD SYSTEM

The UF AV5000 uses a menu system. Arrows show the four directions to leave a menu box. Pressing a corresponding keypad arrow will move to the next item in the direction shown. Move the cursor (underline) under numerals and increase or decrease numerals with the ⬆ and ⬇ keys.

To store calibration values permanently (even through power interruptions), press ✓.

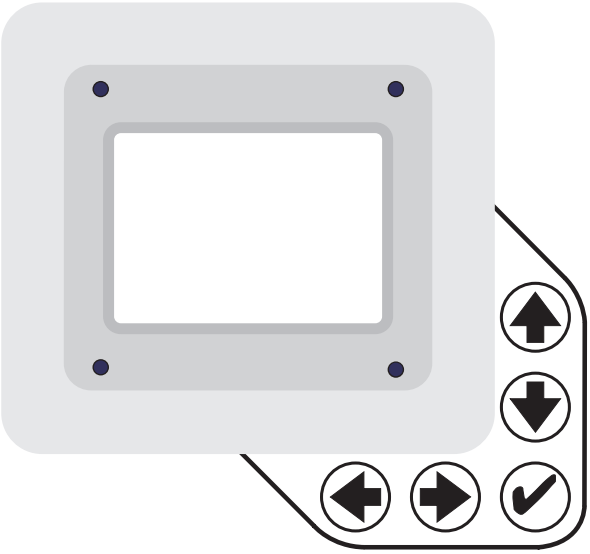

CALIBRATION MENU

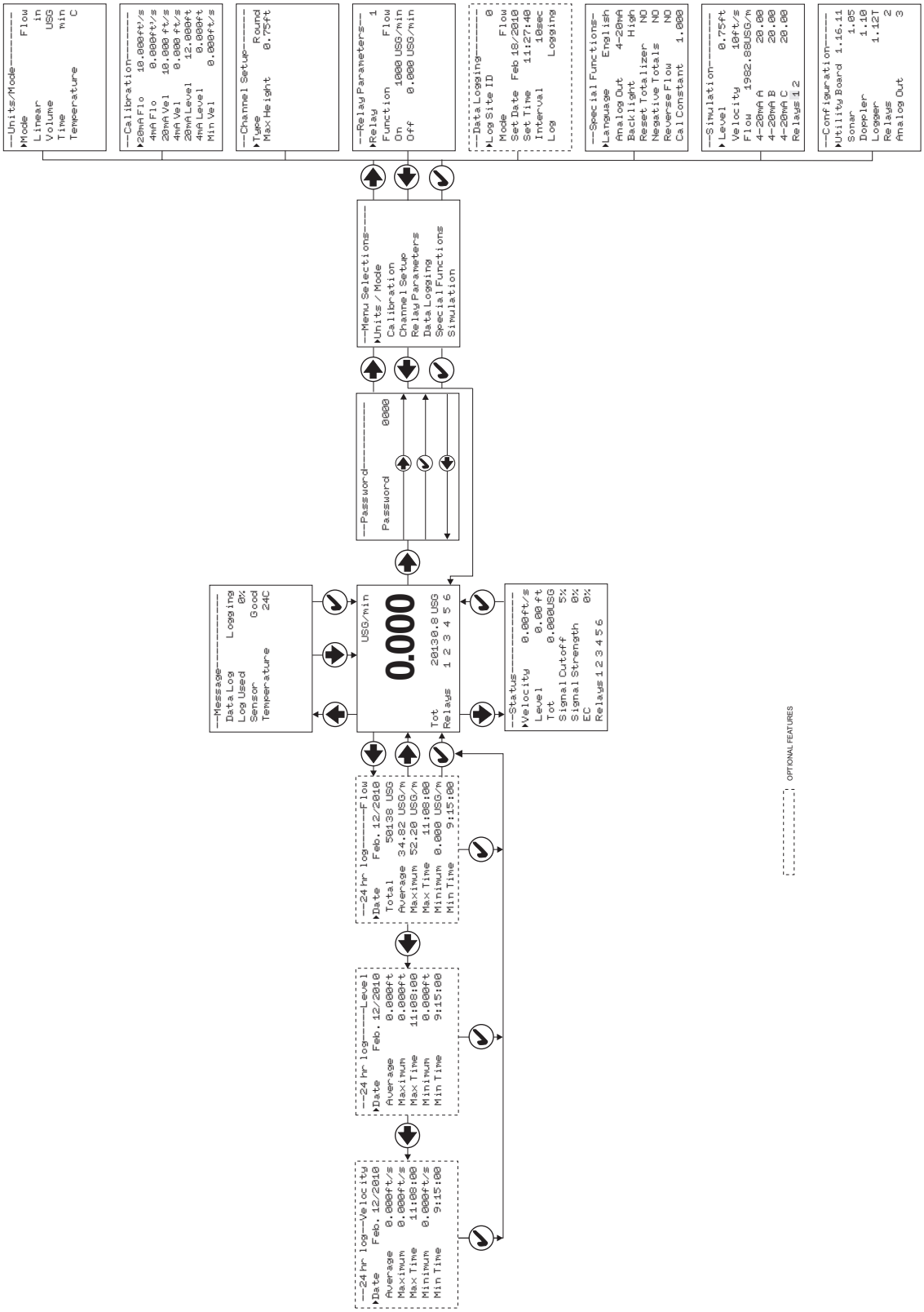

```
                USG/min

        0.000

Tot        20130.8 USG
Relays     1 2 3 4 5 6
```

RUN

The main display shows the units selected from the Units/Modemenu, Flow orVelocity rate being measured, TOTALIZER and RELAY states. The UF AV5000 will start-up with this display and will return to this screen after a timeout if keys are not pressed in other menus.

```
--Message------------
 Data Log       Logging
 Log Used            0%
 Sensor           Good
 Temperature       24C
```

MESSAGE

Press ⬆ from the RUN display to view temperature measurement, status of the data logger and error/warning messages provided by the instrument. The word Messagewill appear on the RUN display if error messages are being generated by the instrument. Refer to the manual section Error/Warning Messages for a description. Press ✓ to return to the main display.

```
--Status-------------
▸Velocity     0.00ft/s
 Level          0.00 ft
 Tot          0.000USG
 Signal Cutoff      5%
 Signal Strength    0%
 EC                 0%
 Relay s 1 2 3 4 5 6
```

STATUS

Press ⬇ from the RUN display to view instrument status.

Velocity	Will be displayed in ft/secorm/sec.
Level	Is displayed in the selected units.
Tot	Displays the current totalizer reading.
Signal Cutoff	Adjust the setting in percent to suppress flow readings at zero flow when fluid swirling or pipe vibration may cause the instrument to continue reading. Example: Signal Cutoffat 5% will force the display and outputs to zero when signal strength drops below 5%.
Signal Strength	Displays percentageof signal being received by theultrasonic sensor.
EC	Displays level measurement Echo Confidence
Relays 1 2 3 4 5 6	Energized relays will display with reversed font eg: 2

```
--24 hr log------Flow
▸Date     Feb. 12/2010
 Total      50138 USG
 Average  34.82 USG/m
 Maximum  52.20 USG/m
 Max Time    11:08:00
 Minimum  0.000 USG/m
 Min Time     9:15:00
```

24 HR LOG (Data Logging option only)

Press ⬅ from the RUN display to view a formatted flow report from instruments with a built-in data logger. Press ⬅ to pan through Level, Velocityand Flowsummaries. Press ⬇ to scroll down one day or repeatedly to scroll to a specific date. Up to 365 days can be stored. Newest date will overwrite the oldest. Press ✓ to return to the main display.

```
--Password----------

 Password        0000
```

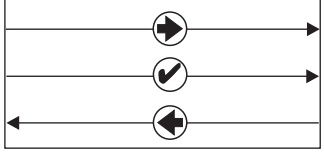

PASSWORD

The Password (a number from 0000 to 9999) prevents unauthorized access to the Calibration menu.

From the Run display press ➡ to get to Password. Factory default password is 0000 and if it has not been changed press ✓ to proceed to the Menu Selectionsscreen.

If a password is required, press ➡ to place the cursor under the firstdigit and ⬇ or ⬆ to set the number, then ➡ to the second digit, etc. Press ➡ or ✓ to proceed to theMenu Selectionsscreen.

A new password can be stored by going to Special Functions/New Password.

```
--Units/Mode--------
▸Mode            Flow
 Linear            in
 Volume           USG
 Time             min
```

```
--Units/Mode--------
 Mode            Flow
▸Linear            in
                   ft
                    m
                   mm
```

```
--Units/Mode--------

▸Volume          USG
                 ft3
                 bbl
                   L
                  m3
                 IMG
                  IG
               USMG
```

```
--Units/Mode--------
 Mode            Flow
 Linear            in
 Volume           USG
▸Time             sec
                  day
                   hr
                  min
```

```
--Units/Mode--------
▸Mode            Flow
 Linear            in
 Volume           USG
 Time             min
 Temperature        C
```

UNITS/MODE

From ▸Modepress the ➡ and then the ⬆ or ⬇ to select Flowor Velocity. Flow mode displays the flow rate in engineering units (e.g. gpm, litres/sec, etc.) Press the ✓to store your selection then the ⬇ to the next menu item.

From ▸Linear press the ➡ key and then the ⬆ or ⬇ to select your units ofmeasurement. Press the ✓to store your selection.

Press the ⬇ key to move the ▸symbol to each subsequent menu item and the ✓ to save your selections.

Note: the volume selection "bbl" denotes U.S. barrels.

▸Temperature press➡ then ⬆⬇ to select CorF.

Press ⬅ or ✓ to return to the Menu Selections screen.

```
--Calibration-------
▸20mA Flo     10.000ft³/s
 4mA Flo       0.000ft³/s
 20mA Vel     10.000ft/s
 4mA Vel       0.000ft/s
 20mA Level    12.000ft
 4mA Level      0.000ft
 Min Vel       0.000ft/s
 Min Level      0.083ft
 Lvl Offset     0.000ft
 Damping            10%
 LOE Time         30sec
```

CALIBRATION

Press ⬇ to Calibration and ➡ to enter. Use ⬇ or ⬆ to position ▸ before each menu item and ➡ to enter. When settings are completed press ✓ to store and return to the Calibration menu.

20mA Flo [5V Flo] — Press ➡and enter the flow rate value for 20mA.

Note: Analogue output can be selected as 4-20mA or 0-5V in Special Functions.

4mA Flo [0V Flo] — Press ➡and enter the flow rate value for 4mA.

20mA Vel [5V Vel] — Press ➡and enter the velocity value for 20mA.

4mA Vel [0V Vel] — Press ➡and enter the velocity value for 4mA.

20mA Level [5V Level] — Optional for QZ02L-A type transducer. Press ➡and enter the level value for 20mA.

4mA Level [0V Level] — Optional for QZ02L-A type transducer. Press ➡and enter the level value for 4mA.

MaxRg — Only for PZ12LP/QZ02L-B type transducer. Press ➡and enter the zero water level (distance from the PZ12-LP sensor to the zero water level).

MinRg — Only for PZ12LP/QZ02L-B type transducer. Press ➡and enter the max level (distance from the PZ12-LP sensor to the max water level).

Min Vel — Press ➡and enter a minimum velocity cutoff. Forward and reverse velocities less than Min Velwill be forced to zero.

Min Level — Optional for QZ02L-A type transducer. Press ➡and enter a minimum level cutoff. Level reading less than Min Level will be forced to zero.

Lvl Offset — Optional for QZ02L-A type transducer. Press ➡and enter an offset to level measurement. Set to 0.00 when sensor mounted on floor of channel. When sensor is mounted above the floor of the channel enter the distance between channel floor and bottom of sensor.

Note: 4mA is not affected by Lvl Offset settings. 4mA is the bottom of the channel or pipe.

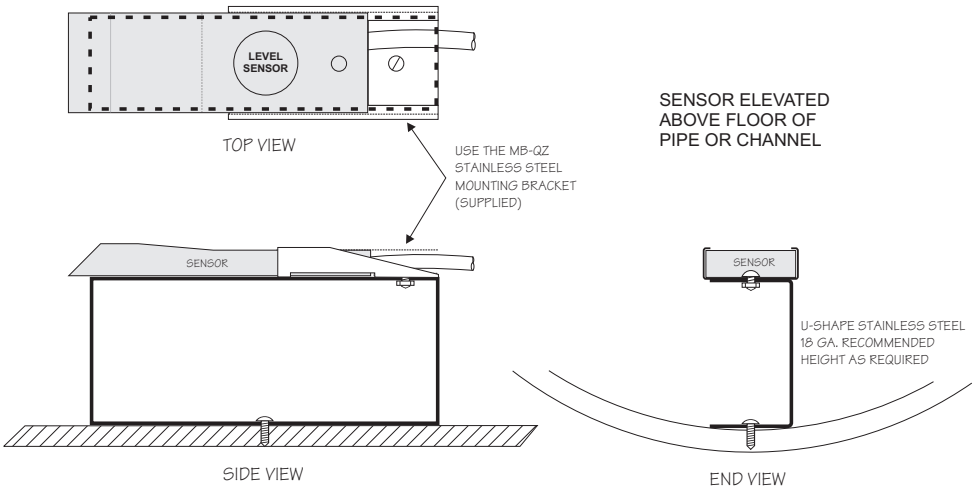

Damping — Increase damping to stabilize readings under turbulent flow readings or to reject spurious level readings. Decrease for faster response to changes in flow.

LOE Time — Press ➡and enter the number of seconds allowed without receiving an echo before the UF AV5000 displays ECHO LOSS, and Control relays change state as calibrated under Relay Parameters.

Press ✓ from the Calibrationdisplay to return to Menu Selections.

```
--Channel Setup------
▸Type            Round
 Max Height     0.75ft
```

CHANNEL SETUP

Round — Select Round for open pipes. Set Max Height to the inner diameter of the pipe.

Rectangle — Select Rectangle for rectangular channels. Enter the channel width.

Trapezoid — Select Trapezoid for trapezoidal shaped channels. Specify the Width and Slope of the channel as shown in the following illustration.

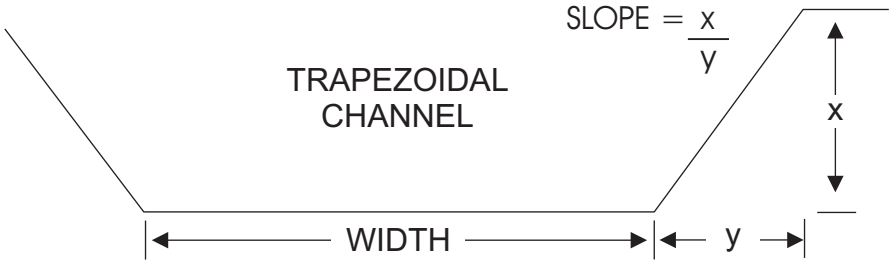

Egg — Select Egg for Egg shaped channels. Enter the Max Height of the channel.

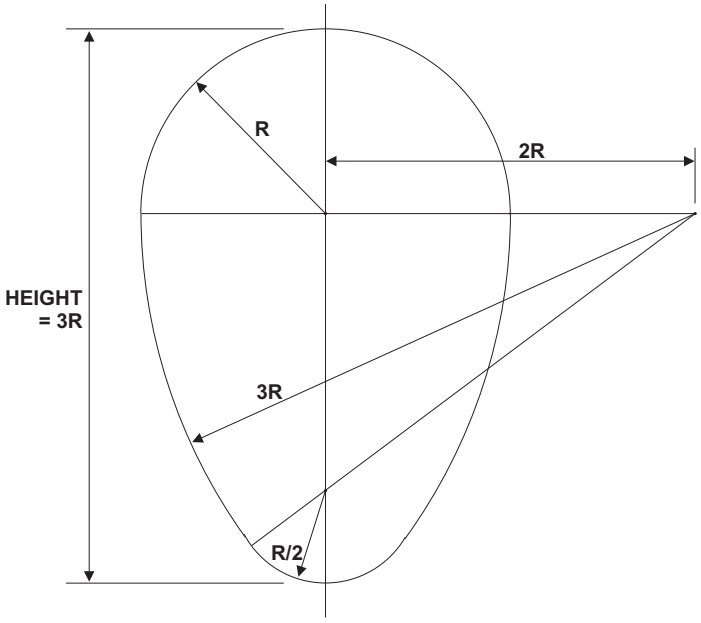

```
--Custom Channel-----
▸Type            Custom
 Reset Data         No
 Max Height    0.75 ft
 Division      0.05 ft
 Increment #         0
 Width        0.000 ft
 Level        0.000 ft
```

CUSTOM CHANNELS

Reset Data	Old data MUST be removedbefore enteringdata for a new channel. Press ➡ then press ⬆ to Yesand press ✓ to clear old data.
Max Height	Enter the maximum height of the channel.
Division	Divide the maximum height into equal increments (maximum of 40) and enter this division value (example 1”, 1 cm etc.)
Increment #	Enter the increment number if you want to edit aprevious entry or to skip entering widths for some levels (Note: The custom channel will interpolate widths between entry points).
Width	Enter the measured width of the channel at the level shown (Note: To enter 0 width you must press ➡ and then ✓ to store a 0 width data point).
Level	Displays the level of the channel for each increment and width entry.

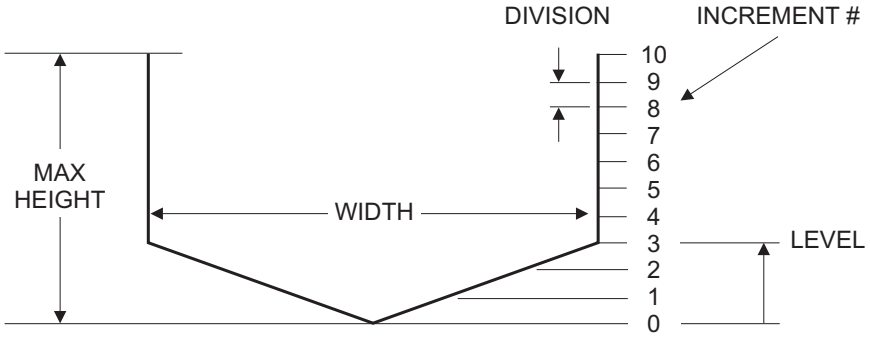

Note:

Custom channel data in equal width increments with variable height measurements must be converted to the format shown above using the “Channel Data Translator” PC software.

```
--Relay Parameters--
▸Relay                1
 Function        Flow
 On           1000 USG
 Off         0.000 USG
```

RELAY PARAMETERS

Relay — Press ➡ and ⬇ or ⬆ to select a relay (2 relays are standard, 4 additional are optional).

Function — Press ⬇ or ⬆ to selectOff,Pulse, Flow, Velocityor Level.

Flow — OnPosition the cursor under the numerals and press ⬇ or ⬆ to set digits to the relay On set point.
Off set digits to theOff set point.

Pulse — Press ⬇ and set digits to the flow volume per relay pulse. Use this feature for remote samplers, chlorinators or totalizers. Minimum time between pulses is 2.25 seconds and pulse duration is 350 milliseconds.

Return toRelayand enter settings for each relay.

VelocityOn — Position the cursor under the numerals and press ⬇ or ⬆ to set digits to the relayOn set point.
Off set digits to the Offset point.

LevelOn — Position the cursor under the numerals and press ⬇ or ⬆ to set digits to the relay Onset point.
Offset digits to the Off set point.
LOE mode Specify the state of the relay for loss of echo condition: Off, Onor Hold.

Press ✓ to return toMenu Selections

DATA LOGGING (OPTIONAL)

Refer to Options section of this manual.

```
--Special Functions-
▸Language      English
 Analog Out     4-20mA
 Backlight        High
 Reset Totalizer    NO
 Negative Totals    NO
 Reverse Flow       NO
 Cal Constant    1.000
```

SPECIAL FUNCTIONS

Language	Select English, Frenchor Spanish
Analog Out	Select 4-20mAor0-5V mode for the analog output.
Backlight	Select High, Medium orLow for continuous backlight.
	Select KeyHi/Lo for high backlight (for 1 minute) after a keypress and then Lo backlight until a key is pressed again.
	SelectKeyHigh,MedorLowfor backlight after a keypress and then backlight off until a key is pressed again.
Reset Totalizer	Press ➡ and select Yes to erase and restart the totalizer at zero.
Negative Totals	Select Yesto have reverse flow readings deducted from the totalizer. SelectNo to totalize forward flow only and ignore reverse flow.
Reverse Flow	Select Yesto invert the sign of the flow measurement.
Cal Constant	Scales the velocity reading. Set to 1.000 for QZ02L transducer.
Restore Defaults	Select Yes and press ✓ to erase all user settings and return the instrument to factory default settings.
New Password	Select any number from0000 to9999 and press ✓. Default setting of 0000 will allow direct access to the calibration menus. Setting of any password greater than 0000 will require the password to be entered to access the calibration menus.

```
--Special Functions-
 Language      English
▸Backlight        High
                Medium
                   Low
             Key Hi/Lo
              Key High
               Key Med
               Key Low
                   Off
```

Press ✓ to return to Menu Selections.

```
--Simulation--------
▸Level          0.75ft
 Velocity       10ft/s
 Flow    1982.88USG/m
 4-20mA A        20.00
 4-20mA B        20.00
 4-20mA C        20.00
 Relays 1 2
```

SIMULATION

Simulate a level reading and a velocity reading (Press ➡ to change value and✓ to store).

Review the resulting Flow reading, the three analog outputs (A: Flow, B: Velocity, C: Level) and the relay states. Note: Outputs will follow the displayed values.

Exercises the 4-20mA output, digital display and control relays (does not affect the totalizer or optional data logger).

Press the ✓ to terminate simulation and return to the Menu Selections screen.

INSTALLATION - SENSOR LOCATION

1. Choose a sensor mounting location where silt or deposits are least likely to accumulate.

2. For best results flow should be evenly distributed across the channel and relatively free of turbulence. (The UF AV5000 is very effective at averaging level and velocity readings in turbulent conditions, but best accuracy and response time is achieved with evenly distributed flow.)

3. Avoid vertical drops, obstructions or elbows immediately up and downstream from the sensor. Locate the QZ02L sensor at least 10 times maximum Head (level) and 10 times the channel width from these flow disturbances.

QZ02L VELOCITY-LEVEL SENSOR MOUNTING

Mount the QZ02L sensor with the stainless steel bracket and hardware supplied. Ensure that the sensor is parallel to the water surface (check with a level). Mount with the tapered end of the sensor pointing upstream and the sensor cable pointing downstream.

Clip or tie wrap the sensor cable securely to the pipe or channel wall.

Note: The mounting bracket is designed to release the sensor if weeds or rags are caught by the sensor.

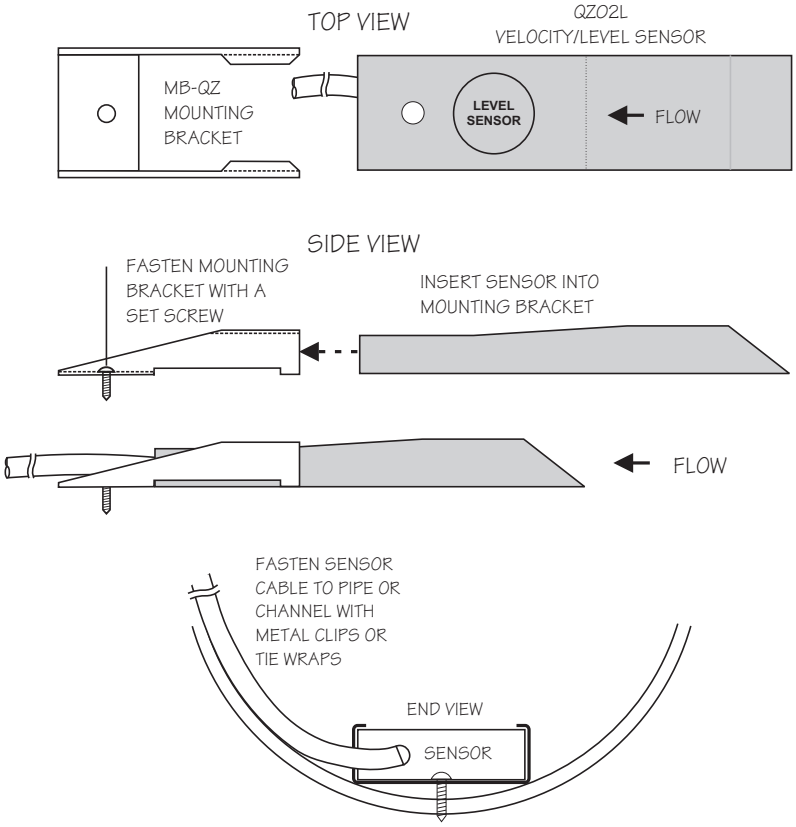

GOOD

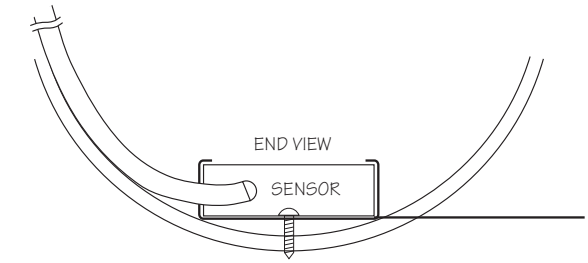
END VIEW
SENSOR

SENSOR

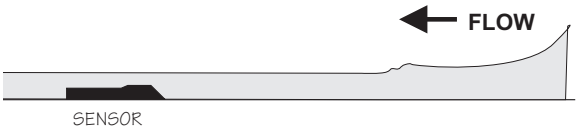
FLOW
SENSOR

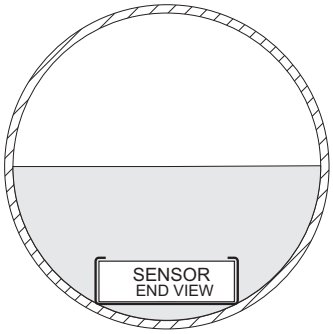
SENSOR
END VIEW

BAD

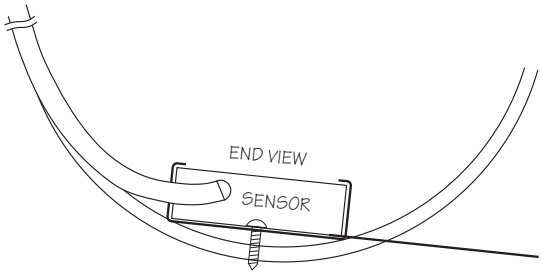
END VIEW
SENSOR

SENSOR

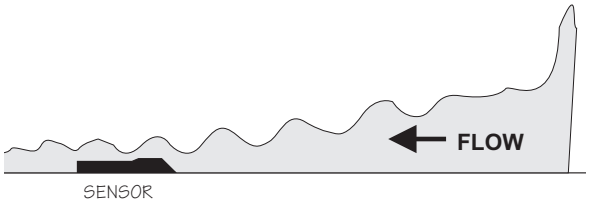
FLOW
SENSOR

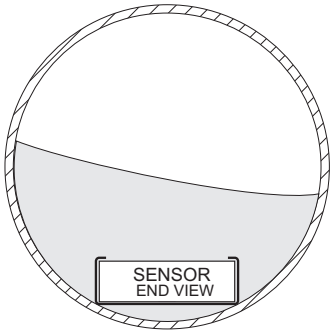
SENSOR
END VIEW

OPTIONAL PIPE BAND MOUNTING WITH QZ02L SENSOR

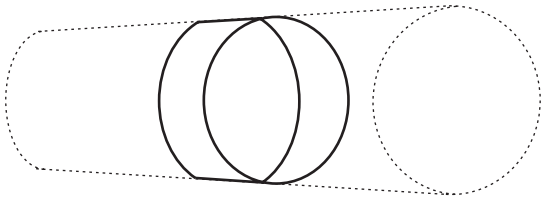

Install the stainless steel pipe band with the sensor mounting bracket at the invert (bottom) of the pipe. Ensure that the sensor bracket is parallel to the water surface (check with a level). Mount so the tapered end of the sensor will point upstream and the sensor cable will point downstream. (Turn the ¼" adjustment nut clockwise to expand the bracket and secure to the pipe wall by friction fit.)

Insert the sensor into the mounting bracket and tie-wrap the sensor cable securely to the pipe band using the holes provided.

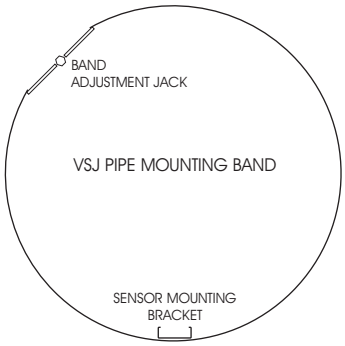

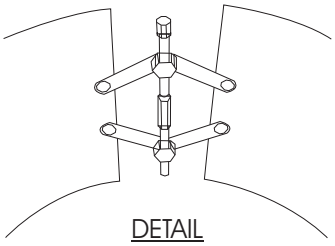

DETAIL
BAND ADJUSTMENT
JACK

OPTIONAL QZ02L-DP VELOCITY SENSOR MOUNTING

Mount the velocity sensor at or near the bottom of the channel or pipe in a position where it will be continuously submerged. The QZ02L-DP velocity sensor does not have to be parallel to the water surface. Position where silt or solids will not build-up on the sensor.

OPTIONAL PZ12-LP LEVEL SENSOR MOUNTING

Mount the PZ12-LP non-contacting ultrasonic level sensor in an unobstructed position at least 203.2mm (8”) above the high water level. Install the stainle ss steel mounting bracket in a horizontal position (check with a level) and then insert the PZ12-LP sensor.

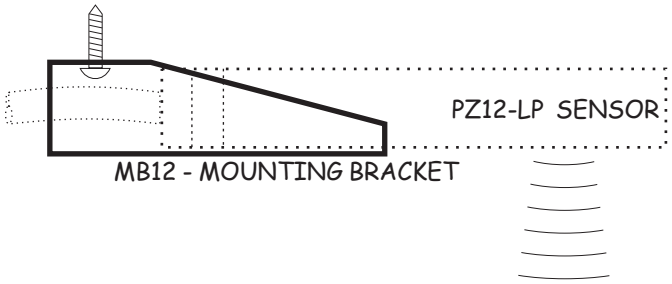

PZ12-LP MANHOLE MOUNTING

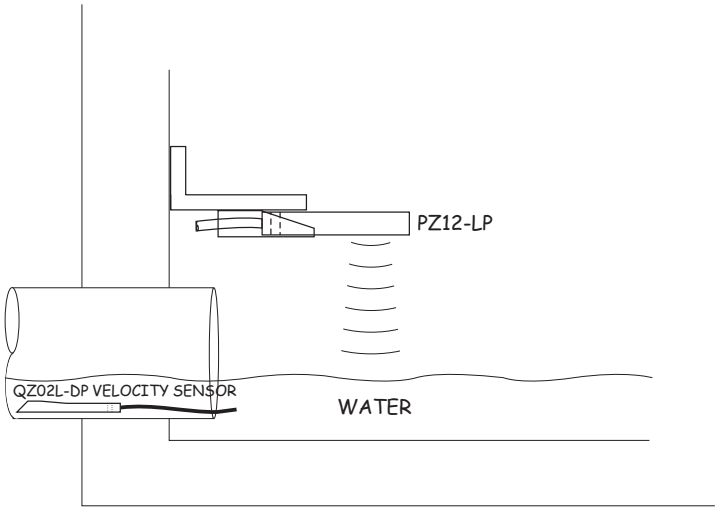

PZ12-LP PIPE MOUNTING

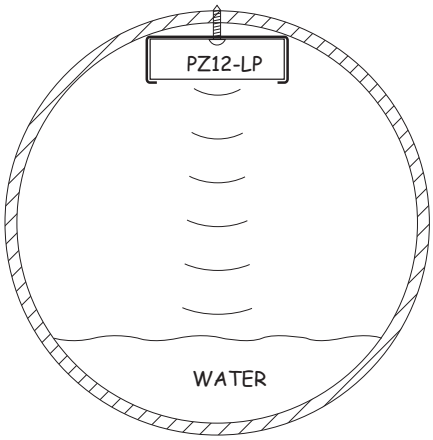

ENCLOSURE INSTALLATION

Locate the enclosure within 6 m (20 ft) of the sensor (up to 150 m - 500 ft optional). The enclosure can be wall mounted with the four mounting screws (included) or panel mounted with Option PM Panel Mount kit from Micronics Limited.

Avoid mounting the enclosure in direct sunlight to protect the electronics from damage due to overheating and condensate. In high humidity atmospheres, or where temperatures fall below freezing, Option TH Enclosure Heater and Thermostat is recommended. Seal conduit entries to prevent moisture from entering enclosure.

NEMA4X (IP66) WITH CLEAR COVER

1. Open hinged enclosure cover.

2. Insert #8 screws (supplied) through the four enclosure mounting holes to secure the enclosure to the wall or mounting stand.

Additional conduit holes can be cut in the bottom of the enclosure with a hole saw or Greenlee-type hole cutter.

DO NOT make conduit/wiring entries into the top of the enclosure.

Note: This non-metallic enclosure does not automatically provide grounding between conduit connections. Grounding must be provided as part of the installation. Ground in accordance with the requirements of the National Electrical Code. System grounding is provided by connecting grounding wires from all conduit entries to the steel mounting plate or another point which provides continuity.

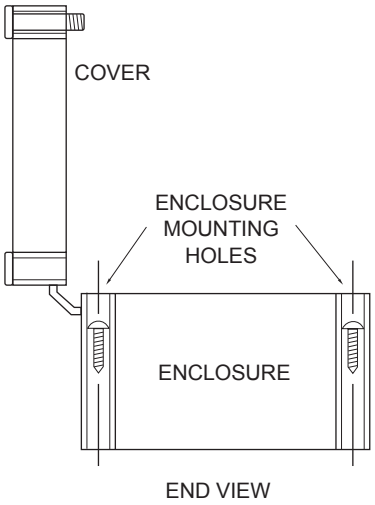

CLEANING

Cleaning is not required as a part of normal maintenance.

FIELD TROUBLESHOOTING

The UF AV5000 uses an ultrasonic level sensor to determine channel AREA and an ultrasonic Doppler sensor to measure flow VELOCITY.

The QZ02L transducer combines both sensors in one housing.

An optional configuration uses the PZ12-LP "down-looking" level sensor and a QZ02L-DP velocity sensor.

To troubleshoot the UF AV5000, verify correct operation of LEVEL and VELOCITY measurements separately.

Note: Selecting "Defaults" in theSPECIAL FUNCTION menu will return the instrument to "as-shipped" factory settings.

LEVEL (QZ02L SENSOR)

SYMPTOMS	FAULTS	SOLUTIONS
EC bar graph at zero	- very turbulent flow	- IncreaseLOE time (SPECIAL FUNCTION)
	- very aerated flow	- relocate sensor or use PZ12-LP
	- sensor not level	- level sensor with "Bullseye" level
	- sediment/dirt/grease build-up on sensor	- clean sensor with liquid soap
-Level display reads 1.0 inches	- Level at or less than 1.0 inches	

VELOCITY (QZ02L SENSOR)

SYMPTOMS	FAULTS	SOLUTIONS
- No velocity reading	- Grease/sediment on sensor	- Clean sensor with detergent
	- Improper hook-up	- Check sensor connections

SENSOR CABLE RESISTANCE TEST

Unplug the green sensor terminal from the Doppler board and connect the sensor wires as shown. With a multimeter, perform resistance checks for each set of wires. One single loose terminal may cause false readings.

Test across shield and core of each wire: TMTR (black/white) and RCVR (black). Resistance should be approximately 82.5K ohms for any cable length. High readings indicate an open circuit and low readings indicate a short or partial short in the sensor cable.

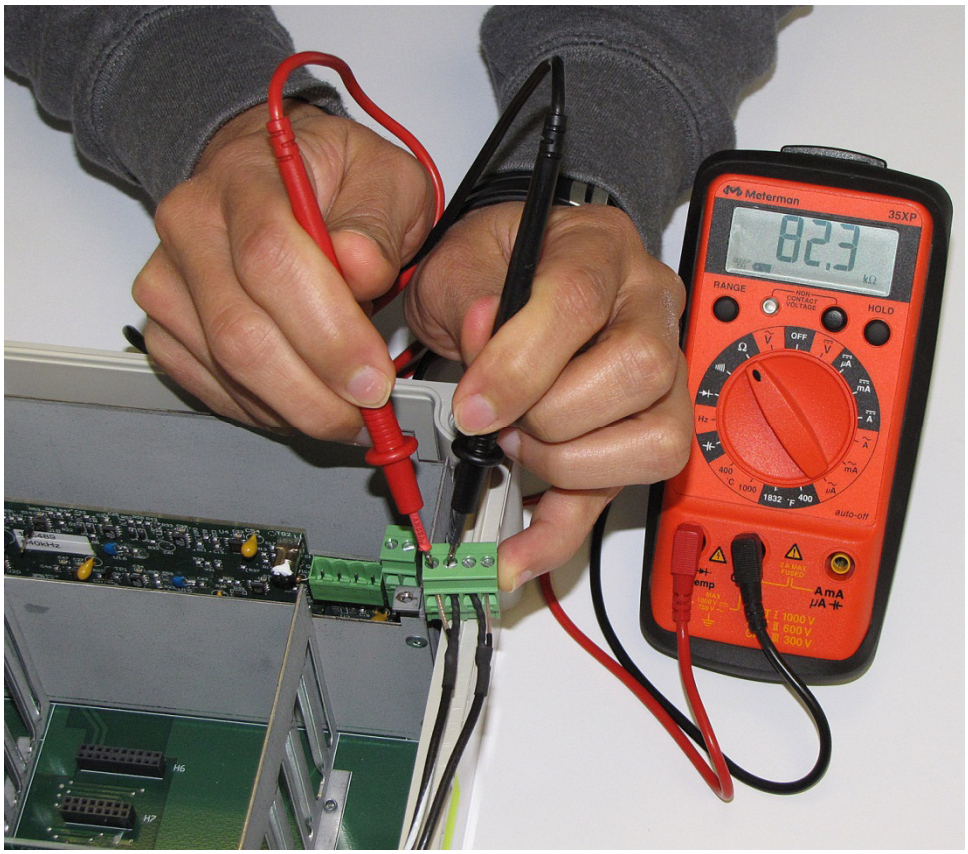

PRODUCT RETURN PROCEDURE

Instruments may be returned to Micronics for service or warranty repair.

1) Obtain an RMA Number from Micronics -
Before shipping a product to the factory please contact Micronics by telephone, fax or email to obtain an RMA number (Returned Merchandise Authorization). This ensures fast service and correct billing or credit.

When you contact Micronics please have the following information available:

1. Model number / Software Version
2. Serial number
3. Date of Purchase
4. Reason for return (description of fault or modification required)
5. Your name, company name, address and phone number

2) Clean the Sensor/Product -

Important: unclean products will not be serviced and will be returned to the sender at their expense.

1. Rinse sensor and cable to remove debris.

2. If the sensor has been exposed to sewage, immerse both sensor and cable in a solution of 1 part household bleach (Javex, Clorox etc.) to 20 parts water for 5 minutes. Important: do not immerse open end of sensor cable.

3. Dry with paper towels and pack sensor and cable in a sealed plastic bag.

4. Wipe the outside of the enclosure to remove dirt or deposits.

5. Return to Micronics for service.

3) Ship to Micronics -

After obtaining an RMA number please ship the product to the appropriate address below:

Customers:

Micronics Limited.
Knaves Beech Business Centre,
Davies Way, Loudwater,
High Wycombe, Buckinghamshire,
United Kingdom, HP10 9QR

RMA#

AREA-VELOCITY FLOW DATA SHEET

Micronics
Knaves Beech Business Centre,
Davies Way, Loudwater,
High Wycombe, Buckinghamshire,
United Kingdom, HP10 9QR

Please complete and return this form to Micronics. It is important. We use this information to check our database for performance of Micronics flow meters in similar applications, and to provide advice and recommendations to you. Thanks for your cooperation.

Contact: _____ Title/Dept.: _____
Company: _____ Project: _____
Address: _____
Tel: _____ Fax: _____

SENSOR:
Model/Type: _____ Cable Length: _____
Elec. Class: _____ Type of Pump: _____
Distance from nearest Pump, Controlling Valve, Orifice or open Discharge: _____

INSTRUMENT:
Model/Type: _____ Power Input: _____
Calibrated Range: _____ Indication: _____
Operating Temp.: _____ Alarm: _____
Enclosure Class: _____ Pulse/Unit: _____
Elec. Class: _____ Output: _____

SERVICE CONDITIONS:
Pipe ID: _____ ❑ Vertical ❑ Horizontal
Pipe Mat'l: _____ % Solids: _____
Fluid: _____ Material Build-up: _____
Oper. Flow: _____ Vibration: _____
Max. Flow: _____ Max. Pressure: _____
Min. Flow: _____ Max. Temp: _____

Notes / Sketch Pipe Run:

LIMITED WARRANTY

Micronics warrants, to the original purchaser, its products to be free from defects in material and workmanship for a period of one year from date of invoice. Micronics will replace or repair, free of charge, any Micronics product if it has been proven to be defective within the warranty period. This warranty does not cover any expenses incurred in the removal and re-installation of the product.

If a product manufactured by Micronics should prove defective within the first year, return it freight prepaid to Micronics along with a copy of your invoice.

This warranty does not cover damages due to improper installation or handling, acts of nature, or unauthorized service. Modifications to or tampering with any part shall void this warranty. This warranty does not cover any equipment used in connection with the product or consequential damages due to a defect in the product.

All implied warranties are limited to the duration of this warranty. This is the complete warranty by Micronics and no other warranty is valid against Micronics. Some states do not allow limitations on how long an implied warranty lasts or limitation of incidental or consequential damages, so the above limitations or exclusions may not apply to you.

This warranty gives you specific legal rights, and you may also have other rights which vary from state to state.

Micronics Limited.

APPENDIX A – OPTIONS

EXTRA SENSOR CABLE (OPTION VXC)

Each Micronics UF AV5000 flow meter includes 7.6 m. (25 ft), 15 m. (50 ft) or 30 m. (100 ft) tri-coaxial sensor cable. This cable is shielded from electrical interference and is watertight with a polyurethane jacket. Additional cable and Cable Junction Box (Option VJB) may be ordered with the Flow Meter, or the cable may be spliced and extended up to 152 m (500 ft) total length as required during installation. No adjustment is required when the sensor cable is extended or shortened. Use only Micronics tri-coaxial VXC shielded cable, or run three RG174U coaxial cables in a metal conduit.

Extended sensor cable can be installed in conduit for mechanical protection. Recommended installation with a metal junction box is illustrated below:

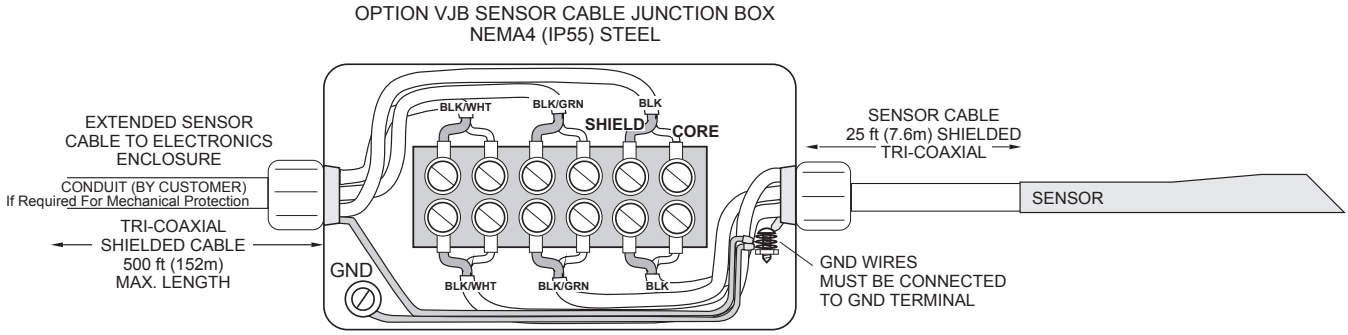

COAXIAL CABLE PREPARATION

VXC Doppler sensor cable can be cut and spliced up to a maximum length of 152 m (500 ft). Cable ends must be prepared as illustrated below.

SENSOR CABLE JUNCTION BOX (OPTION VJB)

Optional Watertight steel NEMA4 (IP55) Junction Boxes with terminal strips are available from Micronics Limited.

DIMENSIONS
OPTION VJB - JUNCTION BOX

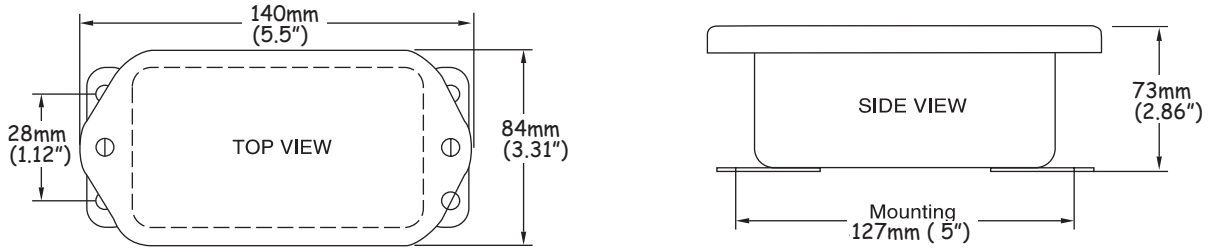

SS PIPE MOUNTING BAND – OPTION VSJ

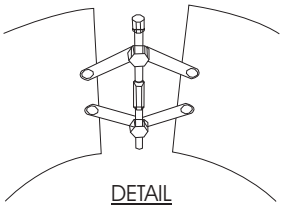

Use optional VSJ stainless steel Pipe Mounting Bands for easy Sensor installation in round pipes.

Each Pipe Band includes:

- Band Adjustment Jack allowing ±0.5” (13 mm) adjustment from the nominal band size
- Stainless steel bracket for Sensor mounting
- Pre-drilled for tie wraps (included) to secure Sensor cable

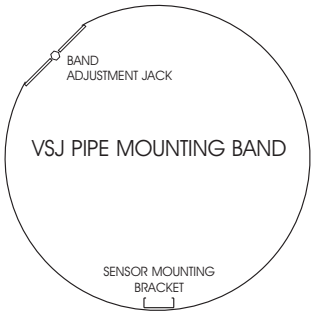

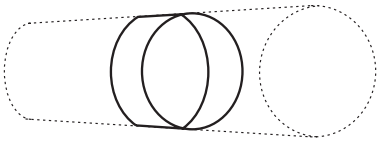

CODE	BAND SIZE
VSJ6	6”/150 mm ID pipes
VSJ8	8”/200 mm ID pipes
VSJ10	10”/250 mm ID pipes
VSJ12	12”/300 mm ID pipes
VSJ14	14”/350 mm ID pipes
VSJ15	15”/375 mm ID pipes
VSJ16	16”/400 mm ID pipes
VSJ18	18”/450 mm ID pipes
VSJ20	20”/500 mm ID pipes
VSJ24	24”/600 mm ID pipes
VSJ30	30”/750 mm ID pipes

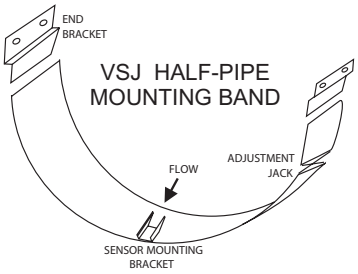

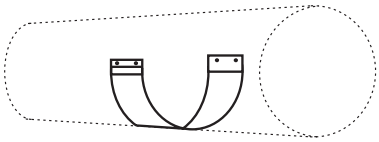

VSJ32-40	32-40” / 800-1000 mm ID pipes
VSJ42-54	42-54” / 1100-1375 mm ID pipes
VSJ56-72	56-72” / 1400-1800 mm ID pipes

Mounting Instructions:

Install the stainless steel pipe band with the sensor mounting bracket at the invert (bottom) of the pipe. Ensure that the sensor bracket is parallel to the water surface (check with a level). Mount so the tapered end of the sensor will point upstream and the sensor cable will point downstream. Turn the ¼” adjusting nut clockwise to expand the bracket and secure to the pipe wall by friction fit.

Insert the sensor into the mounting bracket and tie wrap the sensor cable securely to the stainless steel pipe band.

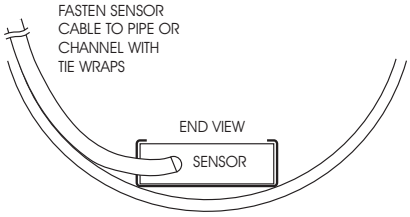

ENCLOSURE HEATER AND THERMOSTAT - Option TH

Instruments can be factory-equipped with an Enclosure Heater and Thermostat or the module can be customer-installed. The Thermostat is factory set to turn ON at 4.5°C (40°F) and OFF at 15.5°C (60°F). Power consumption is 15 Watts.

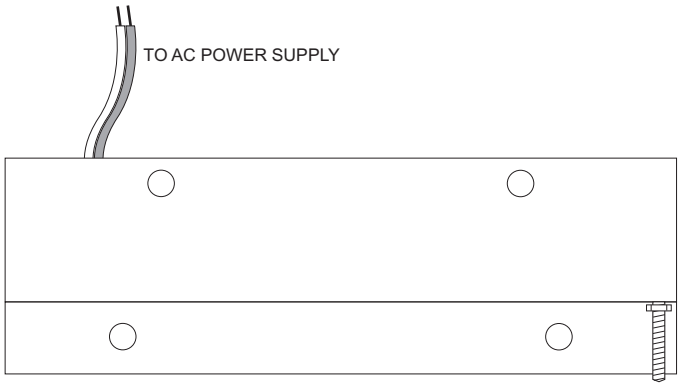

ENCLOSURE SUNSCREEN - Option SCR

Do not mount instrument electronics in direct sunlight. Overheating will reduce the life of electronic components and condensate may form during the heat/cool cycles and cause electrical shorts.

Note:

Exposure to direct sunlight can cause overheating and moisture condensation which will reduce the operating life of electronics.

Protect Instruments from direct sunlight with this iridite finished aluminum sun screen (Micronics Option SCR).

Seal conduit entries with caulking compound to further reduce moisture condensation.

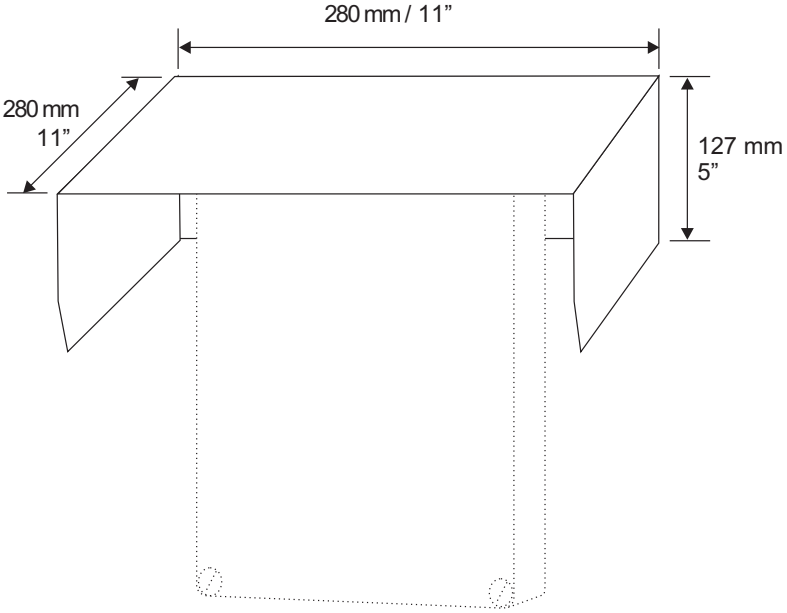

POWER INPUT OPTION
9-32VDC

UF AV5000 Flow Meters may be ordered factory-configured for 9-32VDC power input.

QUICK BENCH TEST:

Connect Sensor as shown below, then Power. Test operation of the UF AV5000 by holding the sensor in one hand and rubbing your thumb or fingers briskly across the face (plastic surface) of the sensor. Allow 15 seconds for the UF AV5000 to process the signal and display a flow value.

CONNECTIONS:

POWER INPUT: Connect 9-32VDC to the + and - terminals. The Power Input GND terminal must be connected to the nearest Ground pole. A 1-amp fuse in line is recommended.

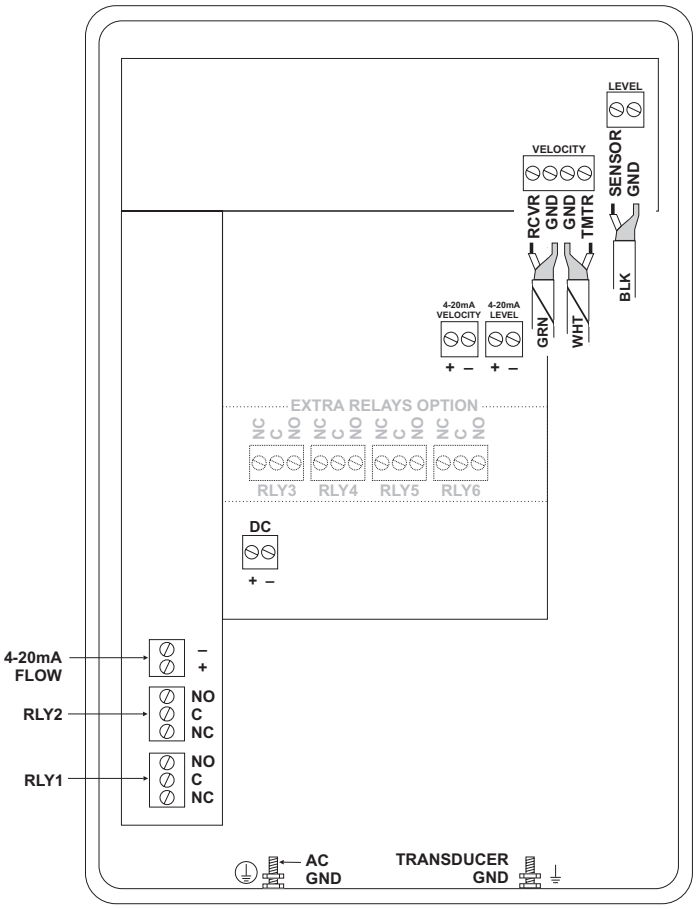

```
--Data Logging-------
▸Log Site ID        00
                     99
 Mode             Flow
               Velocity
 Set Date  Feb 18/2008
           Mar 19/2009
 Set Time     11:27:40
               12:28:41
 Interval        10sec
                 60min
                 30min
                 10min
                  5min
                  2min
                  1min
                 30sec
 Log              Stop
                 Start
               Delete
```

DATA LOGGING (Optional)

Setup

Select Data Loggingfrom Menu Selections.

Log Site ID	Enter a number from00 to99. The site ID will become part of the downloaded file name to help distinguish downloads from different instruments. Press ✓ to store the setting.
Mode	Select Velocity, LevelorFlow. Press ✓ to store the setting.
Set Date	Press ⬆ or ⬇ to scroll and select Month, Day and Year. Press ✓ to store the setting.
Set Time	Press ⬆ or ⬇ to select the current time in Hours, Minutes and Seconds. Press ✓ to store the setting.
Interval	Press ⬆ or ⬇ to select the logging interval. Flow rate reading will be stored at each time interval. Press ✓ to store the setting.
	Note: Press ⬇ to Log ➡ and ⬆ or ⬇ to Delete and ✓ to delete the log file. Press ➡ and ⬆ or ⬇ to Start and ✓ to restart the logger.
Log	Stop,Startor Deletethe log file. You MUST delete old file and start a new log to apply any changes that have been made to theLog Site ID, Mode or Interval.

View 24-hr formatted Reports on the UF AV5000 display. Press ⬅ from the RUN display to view a formatted flow report from instruments with a built-in data logger. Press ⬅ to pan throughLevel,Velocityand Flow summaries. Press ⬇ to scroll down one day or repeatedly to scroll to a specific date. Up to 365 days can be stored. Newest date will overwrite the oldest. Press ✓ to return to the main display.

RETRIEVE LOG FILE

Plug a USB Flash Memory Drive (not supplied by Micronics) into the USB output cable from the instrument. The instrument display will show the message Downloading until the log file is transferred to the memory card and then display Completed. The USB flash drive may be removed.

Download file names will appear in this format:

Tag is set according to theLog Site IDentered in the instrument Data Logging menu.

Download letter will be A for the first download from an instrument. B for the second, then C etc. At the letter Z a - character will appear indicating that the maximum number of downloads for that instrument are on the USB flash drive. Older files can be erased or moved from the flash memory drive or a new memory drive can be used.

OPENING LOG FILES

Install Micronics Logger on your PC or laptop. Refer to the Help menu in the program for detailed instructions.

Select File/Open/Instrument Log (.log) to open the log file from your USB flash drive.

SPECIFICATIONS

Electronics Enclosure:	NEMA4X (IP 66), watertight and dust tight, polycarbonate with clear, shatterproof hinged Lexan cover
Accuracy:	Level: ± 0.25% of Range Velocity: ± 2% of Reading Repeatability: 0.1% F.S., Linearity: 0.1%F.S.
Display:	White, backlit matrix – displays flow rate, totalizer, relay states, operating mode and calibration menu
Programming:	Built-in 5-key calibrator with English, French or Spanish language selection
Power Input:	100-240VAC, 50/60 Hz, (30 W max.) Optional: 9-32VDC (9W max.)
Output:	2Isolated 4-20mA, 1000 ohm load maximum or 2 Isolated 0-5V
Control Relay:	Qty 2, rated 5 ampere SPDT
Temperature Compensation:	Automatic, temperature probe built in to level Sensor
Electrical Surge Protection:	Sensor, 4-20mA, AC power input
Environmental Conditions:	Relative humidity up to 80% -23 to 60°C ambient temperature, maximum 5000 m altitude, pollution degree 4, Installation Category II.Optional Enclosure Heater recommended for condensation protection below -1°C (32°F)

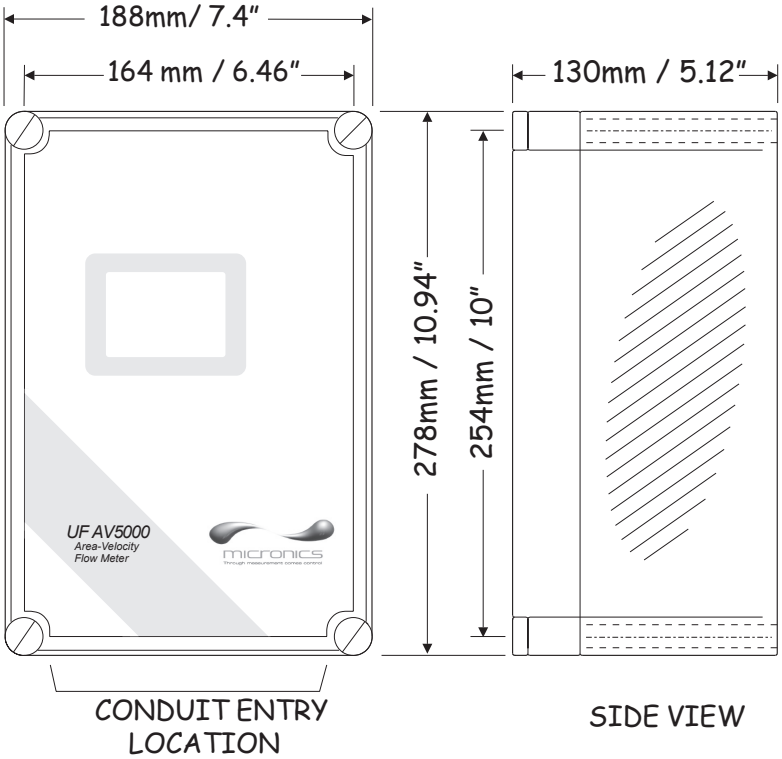

Velocity/Level Sensor QZ02L

Minimum Velocity:	0.03 m/sec (0.1 ft/sec)
Maximum Velocity:	6.2 m/sec (20 ft/sec) [reverse flow to -1.5 m/sec (-5 ft/sec)]
Minimum Head:	25.4 mm. (1 in)
Maximum Head:	4.88 m. (16 ft)
Operating Temperature:	-15 to 65°C (5 to 150°F)
Exposed Materials:	PVC, epoxy resin, polyurethane, ultem
Sensor Cable:	7.6 m. (25 ft) submersible polyurethane jacket, shielded, 3 coaxial
Hazardous Rating:	CSA rated Intrinsically Safe Class I, Groups C,D, Class II, Groups E,F,G with optional Intrinsic Safety Barrier

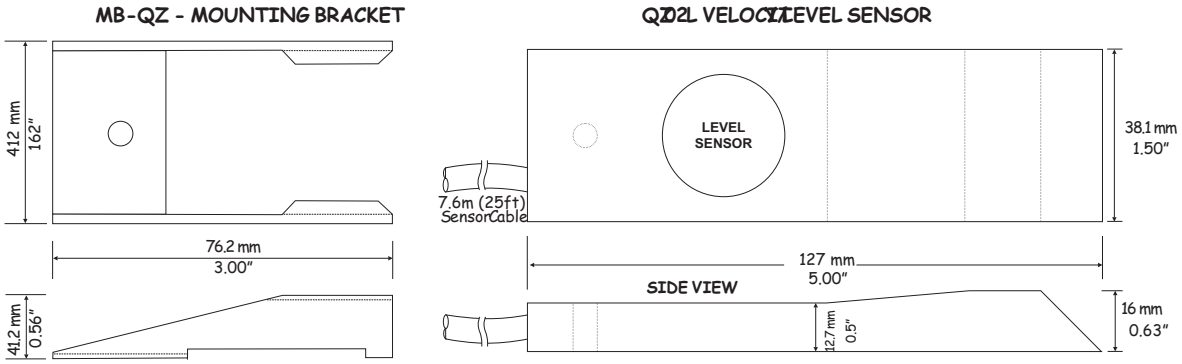

Optional (Velocity only) Sensor QZ02L-DP

Minimum Velocity: 0.03 m/sec (0.1 ft/sec)
Maximum Velocity: 6.2 m/sec (20 ft/sec) [reverse flow to -1.5 m/sec (-5 ft/sec)]
Operating Temperature: -15 to 65°C (5 to 150°F)
Exposed Materials: PVC, epoxy resin, polyurethane, ultem
Sensor Cable: 7.6 m. (25 ft) submersible polyurethane jacket, shielded, 3-coaxial
Hazardous Rating: CSA rated Intrinsically Safe Class I, Groups C,D, Class II, Groups E,F,G, with optional Intrinsic Safety Barrier

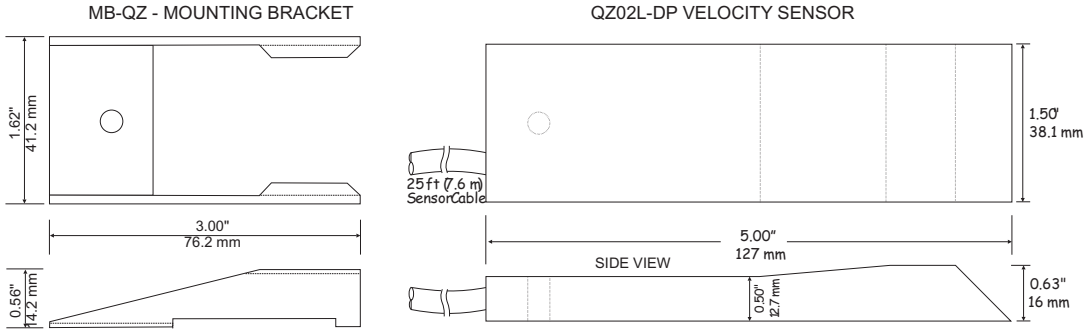

Optional Sensor PZ12-LP

Maximum Range: 3.66m (12 ft)
Minimum Range: 203.2 mm (8")
Beam Angle: 8°
Operating Temperature: -40 to 65°C (-40 to 150°F)
Exposed Materials: Sensor - PVC, Mounting Bracket - 316 Stainless
Hazardous Rating: CSA rated Intrinsically Safe Class I, Groups C,D,Class II, Groups E,F,G with optional Intrinsic Safety Barrier

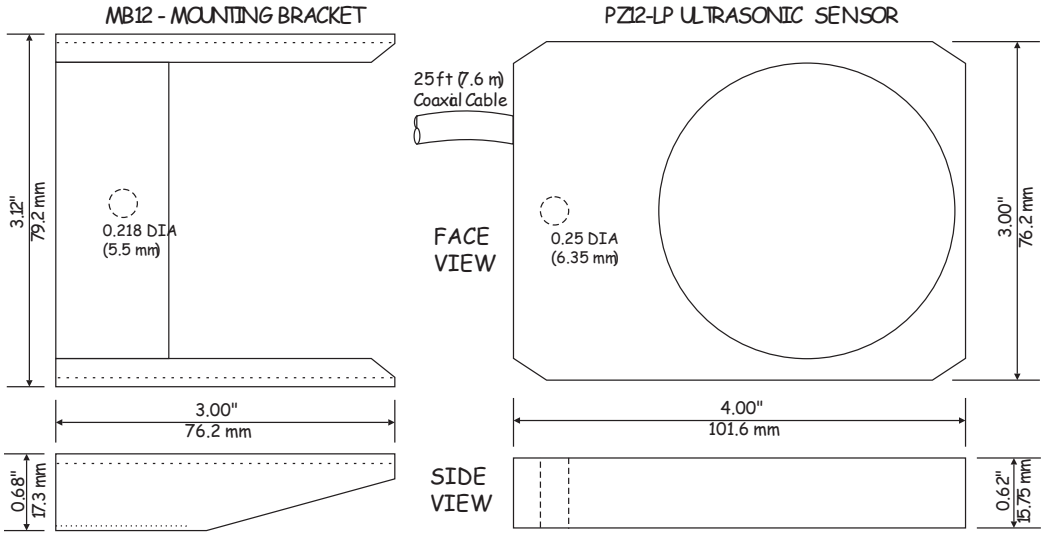

Thank you for reading this data sheet.

For pricing or for further information, please contact us at our UK Office, using the details below.

UK Office
Keison Products,
P.O. Box 2124, Chelmsford, Essex, CM1 3UP, England.
Tel: +44 (0)330 088 0560
Fax: +44 (0)1245 808399
Email: sales@keison.co.uk

Please note - Product designs and specifications are subject to change without notice. The user is responsible for determining the suitability of this product.